S20

Description	S20 Undercounter Basin, 57cm without Tap Hole, with Side Holes
Code	6031B003-0012
Tap Hole Option	Without Tap Hole
Overflow Hole	With Hole
CE	Yes
Material	Ceramic
VitrAclean	No
Dimensions	57
Colour	White

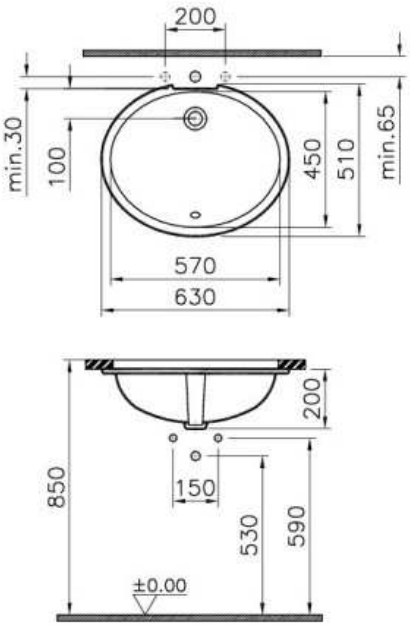

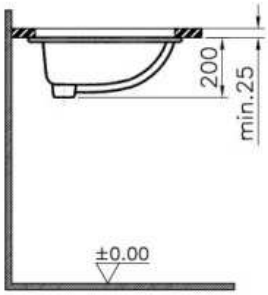

VitrA retains the right to change details about the products and technical specifications without prior notice.