Description	Special Need's Asymmetrical washbasin, 80 cm, with one tap hole, with overflow hole , white
Code	5966B003-0001
VitrAclean	No
Colour	White

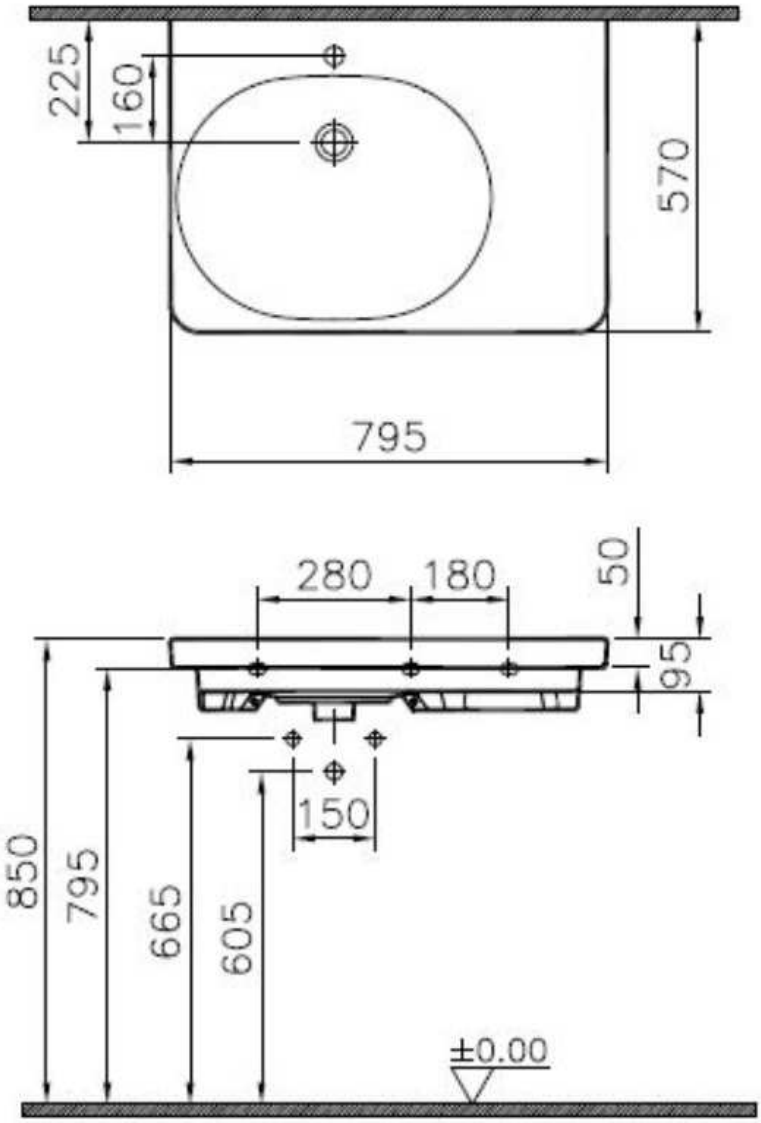

VitrA retains the right to change details about the products and technical specifications without prior notice.