Sento

Description	Sento Vanity basin, 80 cm, with one tap hole, with overflow hole, white
Code	5947B003-0001
VitrAclean	No
Colour	White

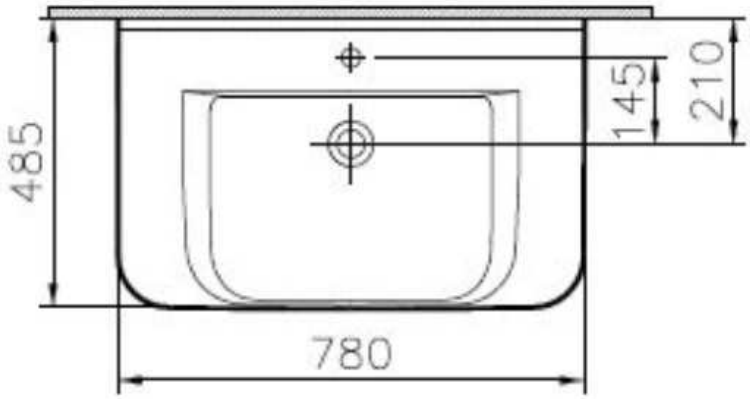

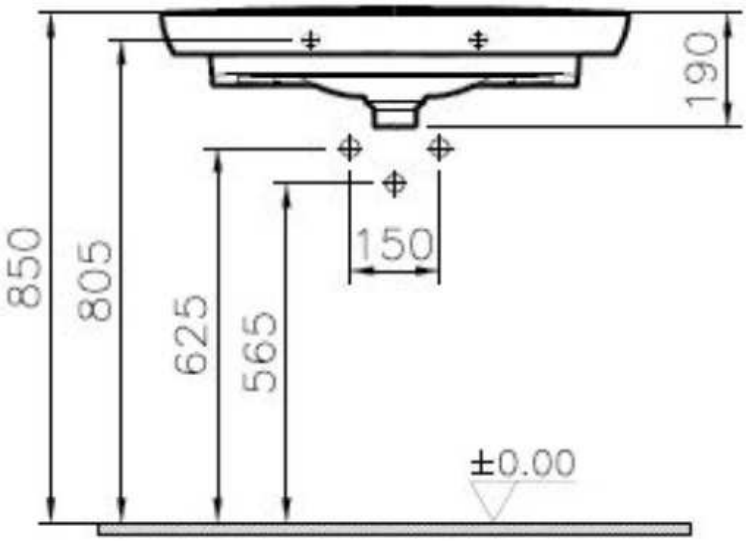

VitrA retains the right to change details about the products and technical specifications without prior notice.